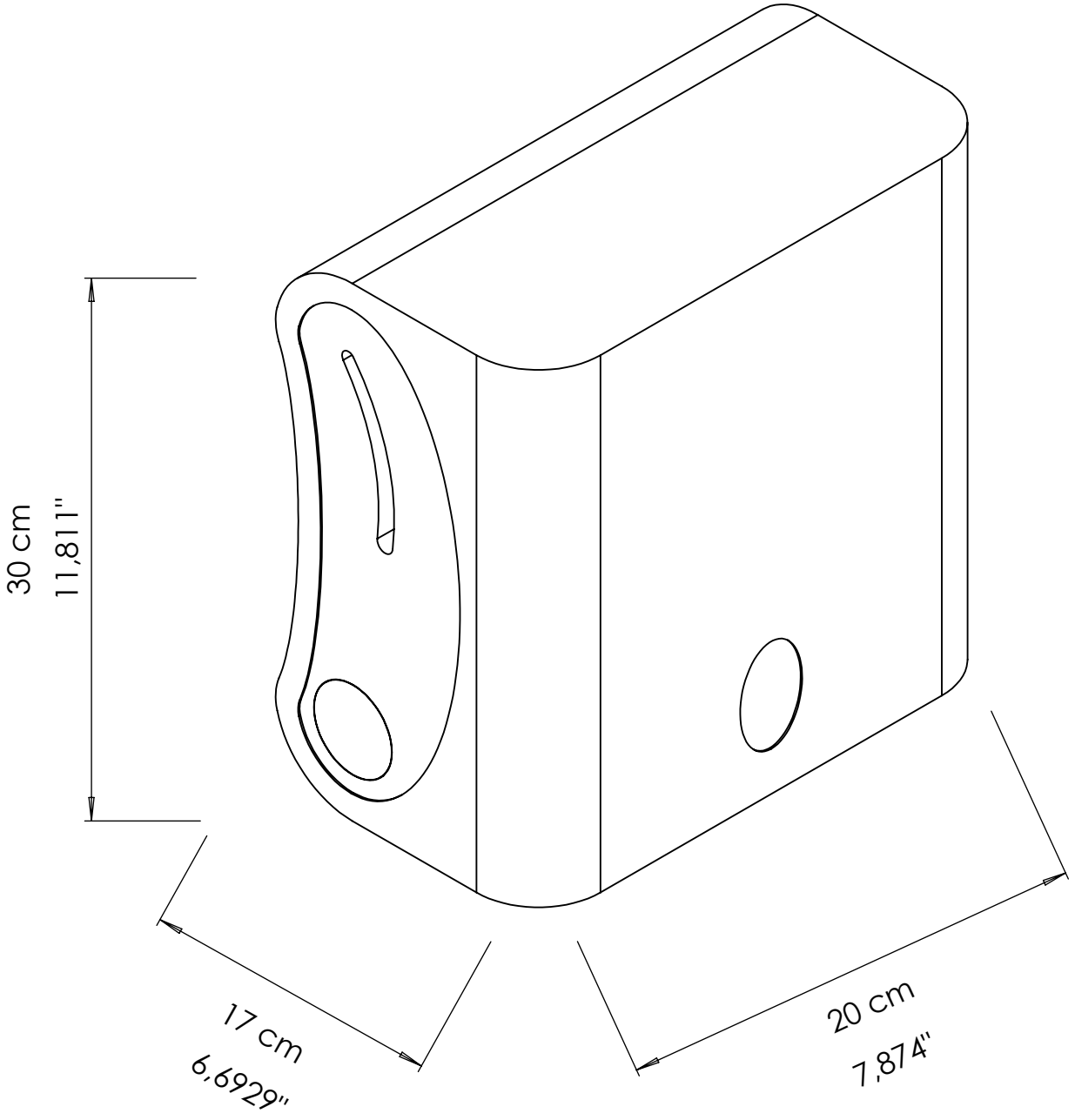
30 cm
11,811"
17 cm
6,6929"
20 cm
7,874"