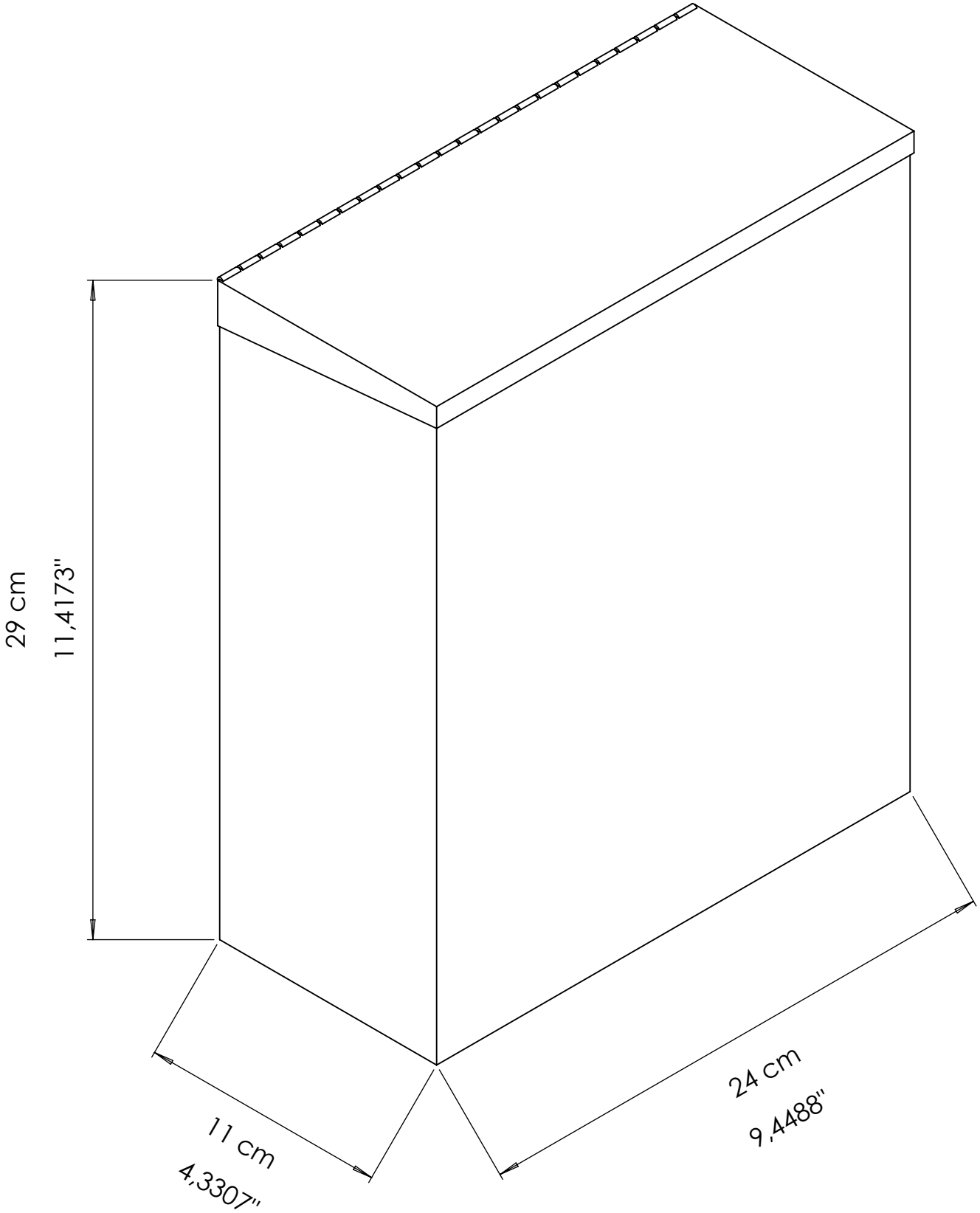
29 cm
11,4173"
11 cm
4,3307"
24 cm
9,4488"

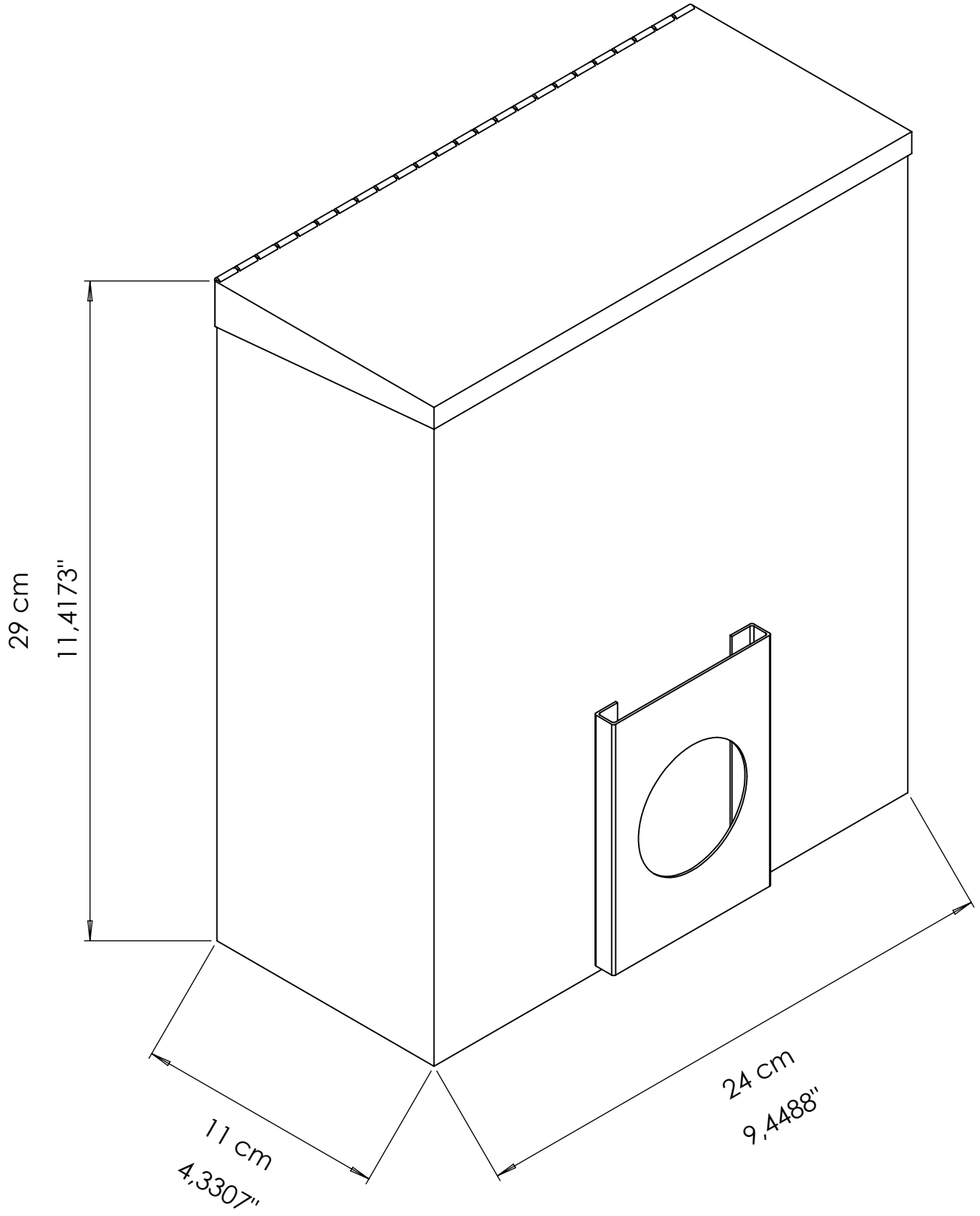
29 cm
11,4173"
11 cm
4,3307"
24 cm
9,4488"