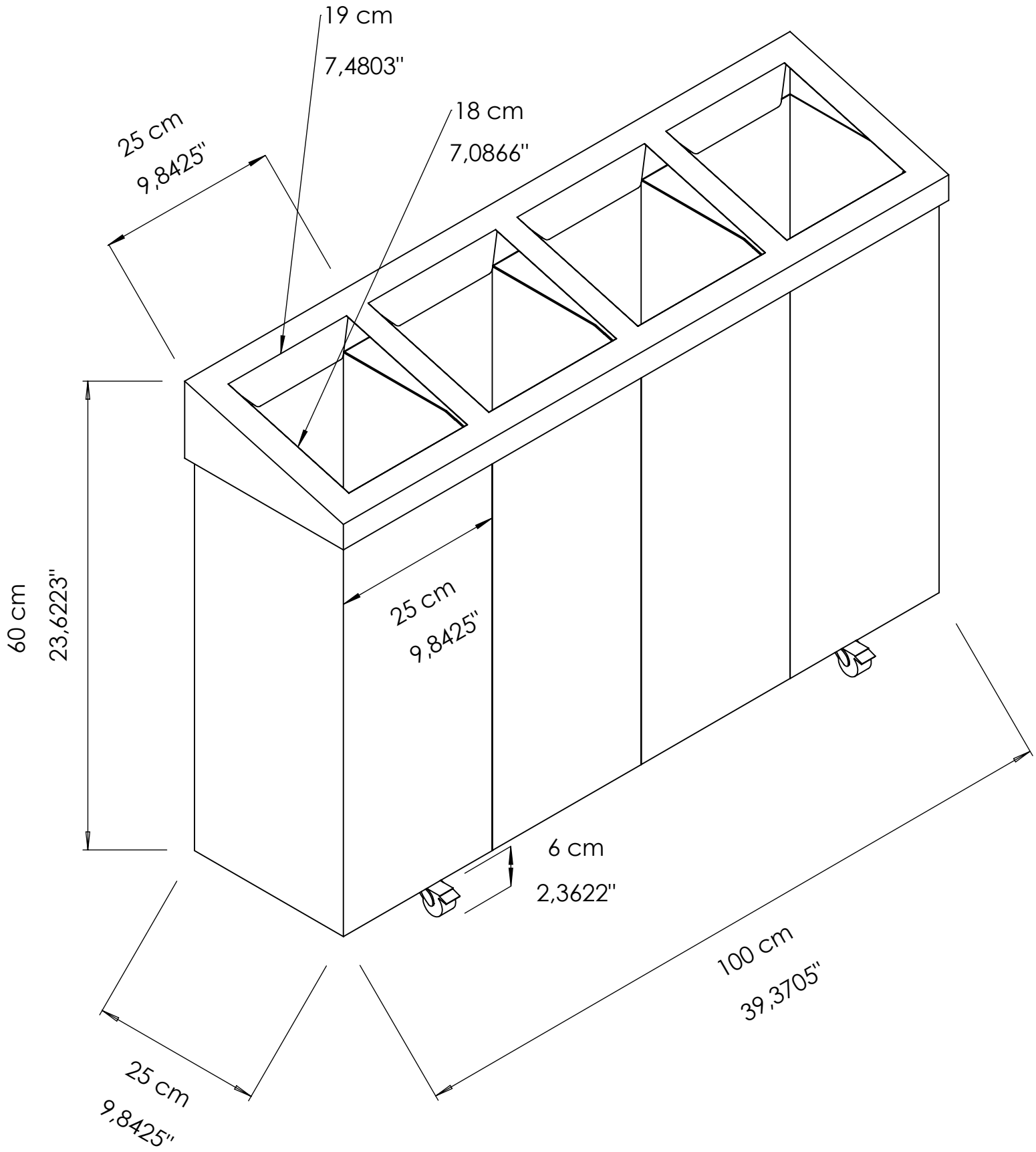
19 cm
7,4803''
18 cm
7,0866''
25 cm
9,8425''
60 cm
23,6223''
25 cm
9,8425''
6 cm
2,3622''
100 cm
39,3705''
25 cm
9,8425''

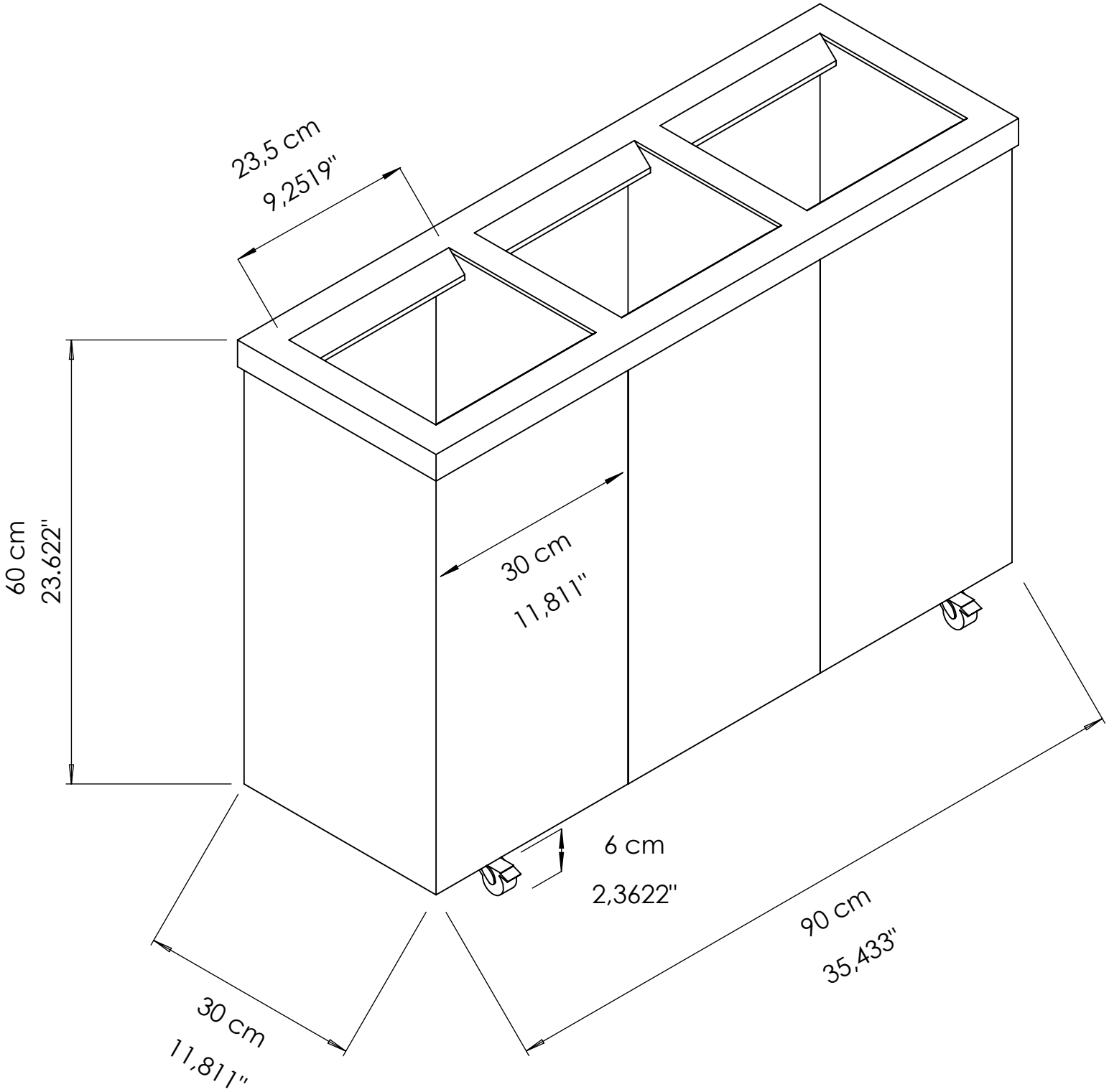
23,5 cm
9,2519"
60 cm
23.622"
30 cm
11,811"
6 cm
2,3622"
90 cm
35,433"
30 cm
11,811"

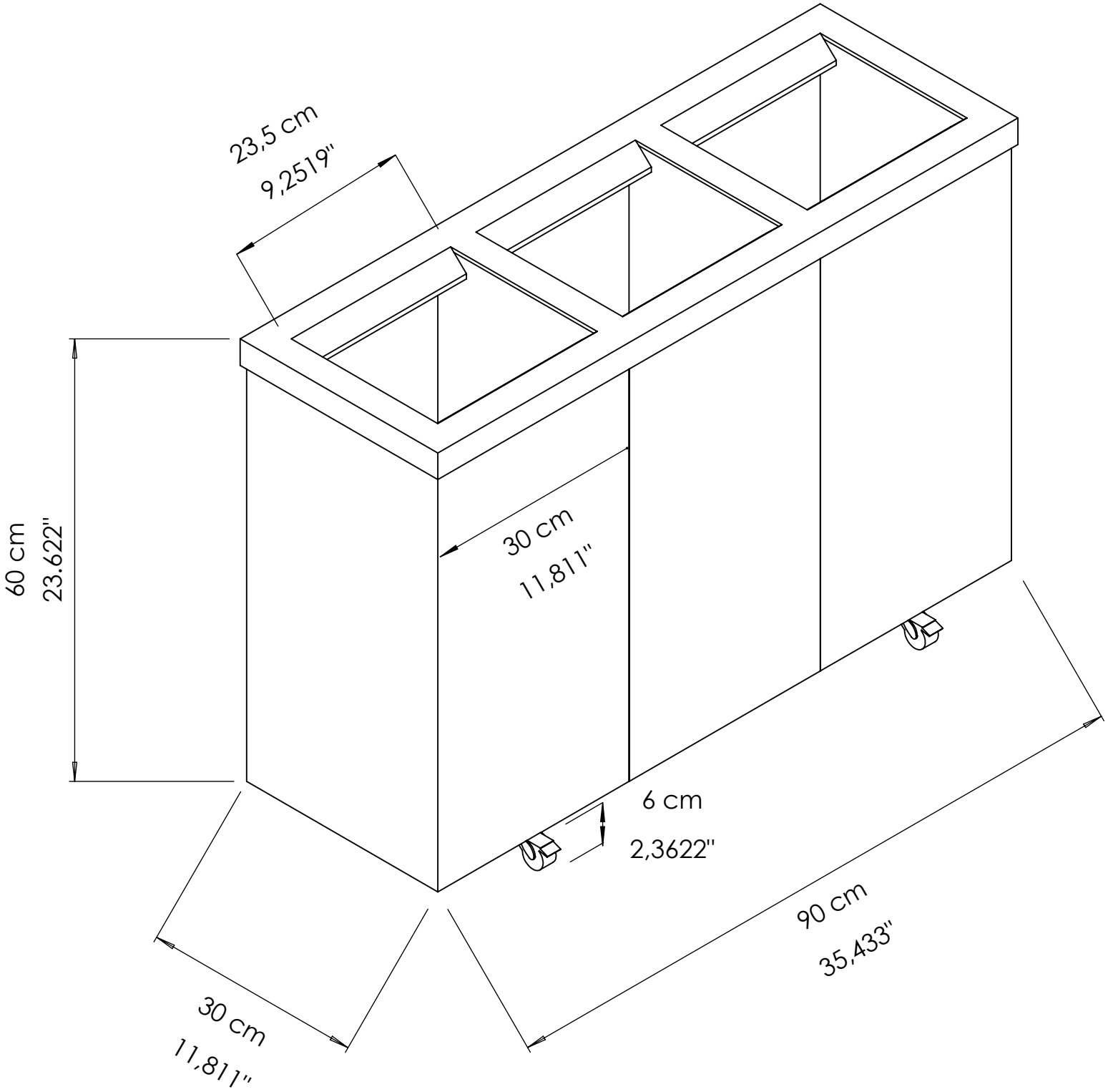
23,5 cm
9,2519"
60 cm
23.622"
30 cm
11,811"
6 cm
2,3622"
90 cm
35,433"
30 cm
11,811"